Points 6 Published

Details Questions

Show Question Details

Question 1 pts

You perform a cross between two true-breeding strains of zucchini. One has green fruit and the other has yellow fruit. The F1 plants are all green, but when these are crossed, the F2 plants consist of 9 green: 7 yellow. What is the observed epistasis interactions.

Recessive epistasis

Reciprocal recessive epistasis

Dominant epistasis

Question 1 pts

Filled-in symbols in the pedigree that follows designate individuals who are deaf. How is deafness inherited? Why are none of the individuals in generation V deaf?

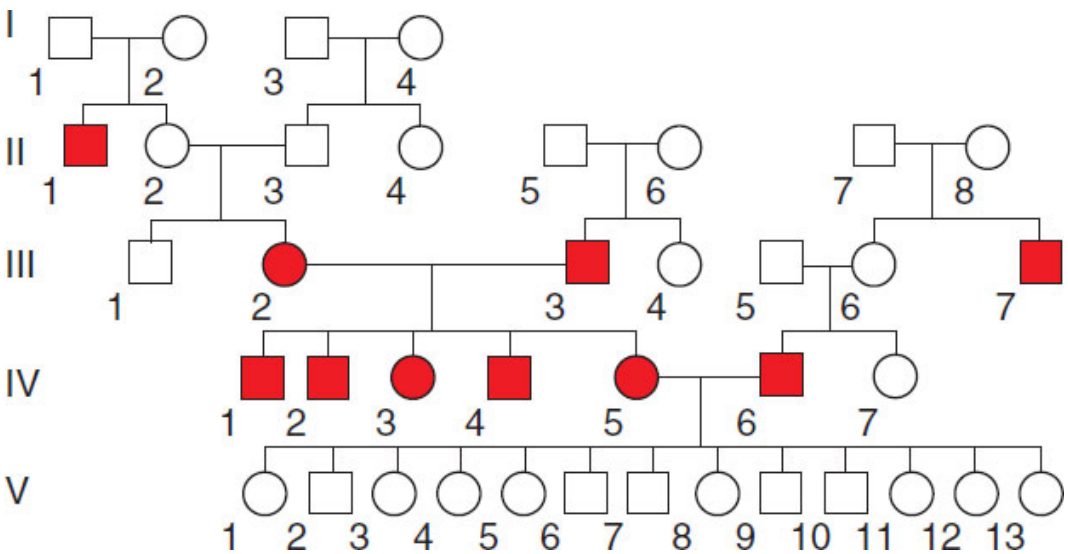

Additive interaction

Recessive epistasis

Complementary

Question 1 pts

Suppose the intermediate called *Colorless precursor 2* in the following pathway was blue instead of colorless.

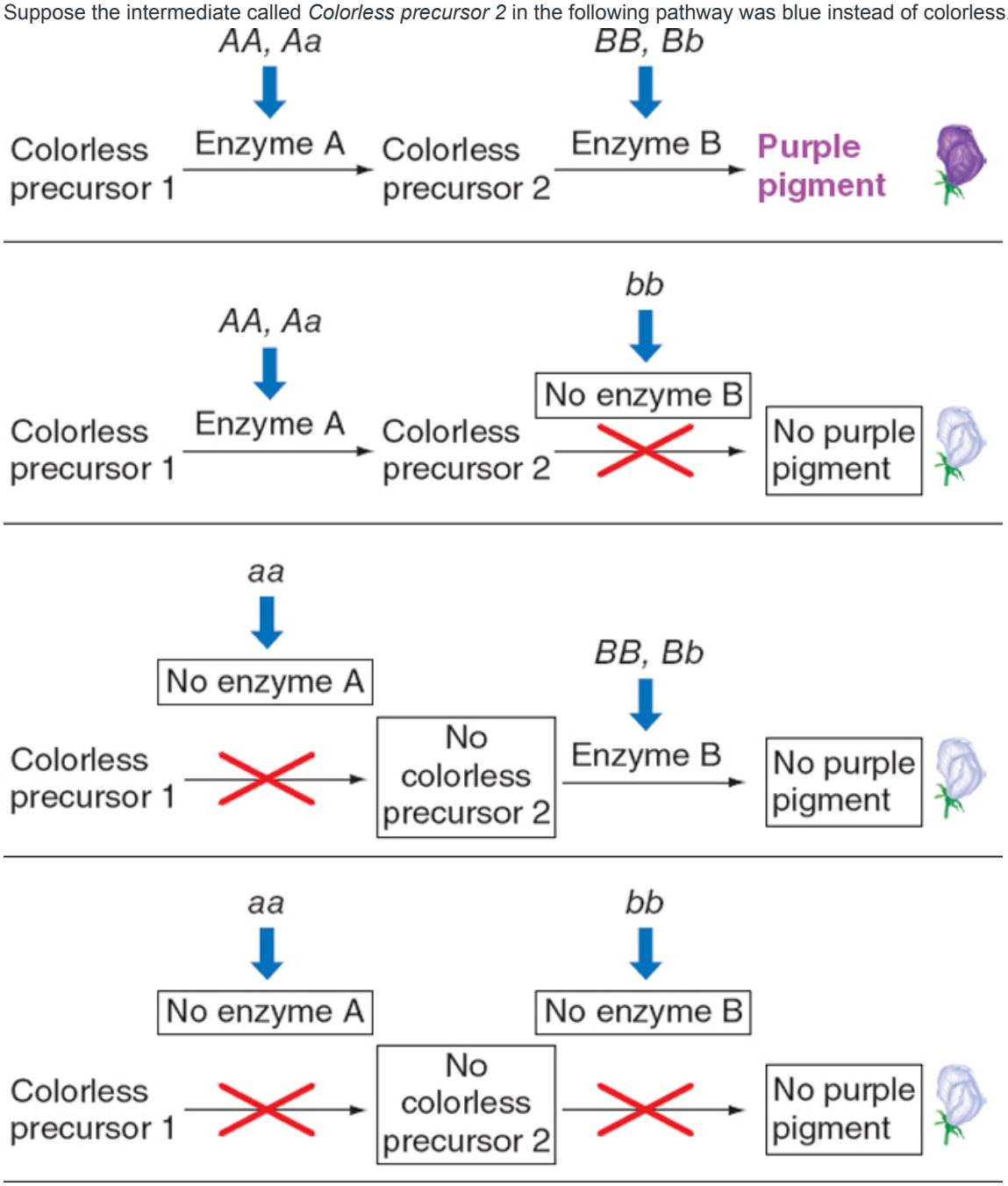

What would be the phenotypic ratio of the F2 from an F1 dihybrid cross? (Blue color is distinct from purple.)

9:3:3:1
9:3:4
9:7
12:3:1
13:3
15:1

Question 1 pts

What type of genetic interaction corresponds to this new phenotypic ratio?

Recessive epistasis

Reciprocal recessive epistasis

Dominant epistasis

Question 1 pts

Secretors (genotypes SS and Ss) secrete their A and B blood group antigens into their saliva and other body fluids, while nonsecretors (ss) do not. What proportion of offspring of an $I^A I^B Ss$ woman and an $I^A I^A Ss$ man would have an apparent Type A blood group, if typing was done using saliva?

1/2

1/3

1/8

1/4

3/8

None

Question 1 pts

What proportion of offspring would have an apparent Type O blood group, if typing was done using saliva?

1/2

1/3

1/8

1/4

3/8

None

+ New Question

+ New Question Group

Find Questions

Notify users this quiz has changed

Cancel

Save